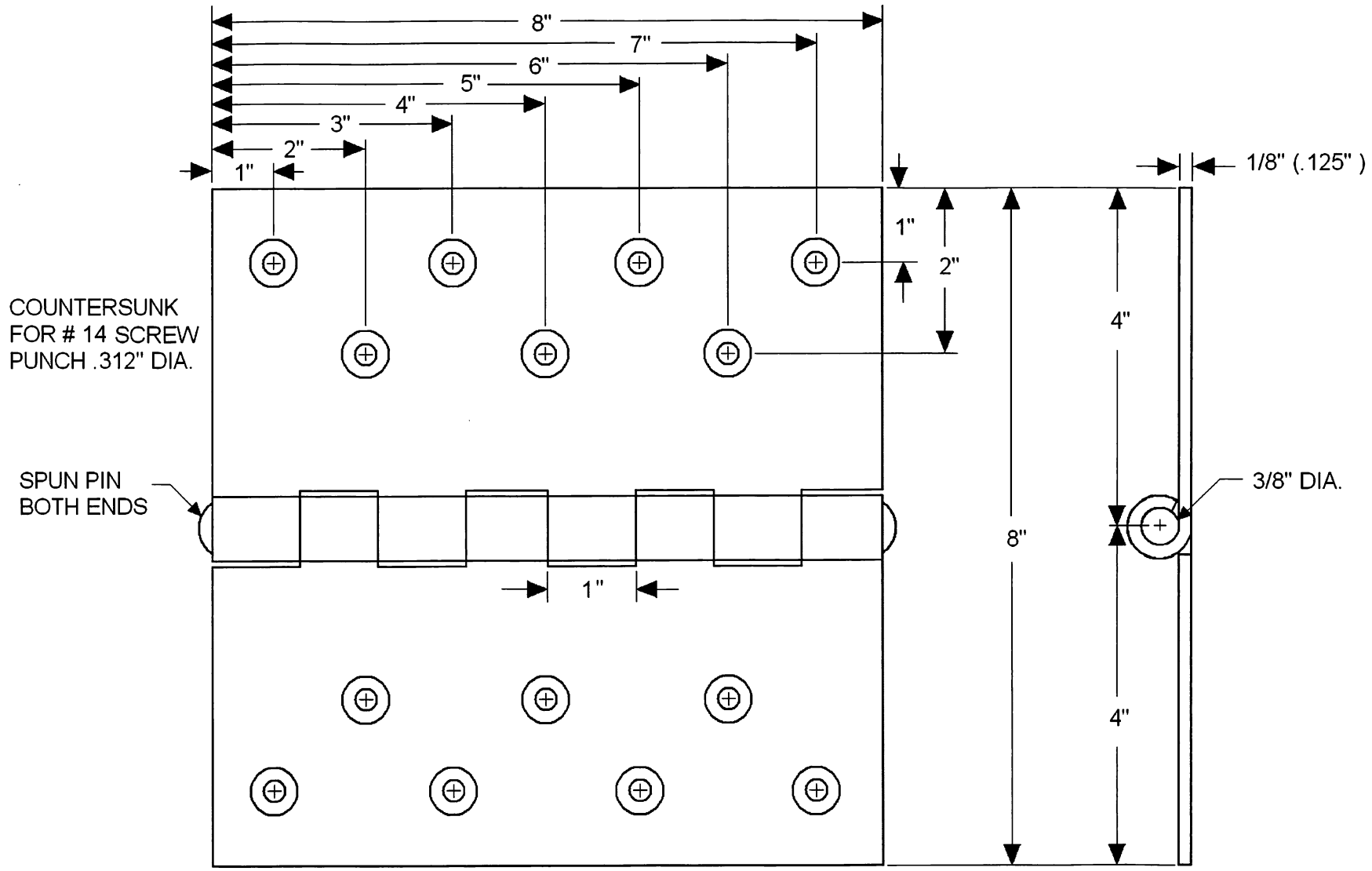

JMC	MATERIAL: STAINLESS STEEL	MATERIAL ALLOY: 304	FINISH: MILL	DATE: 4-7-16	DWG.BY: SPK
JEFCO MFG INC FT.LAUDERDALE,FL PH 954-527-4220 FAX 954-527-4229	REVISIONS:	TOLERANCES: +/- .015"	DESC: SSB-120800-800 HC 8" X 8" BUTT HINGE		
APPROVED BY:			COMPANY: JEFCO MFG. INC.	NO: 10945	