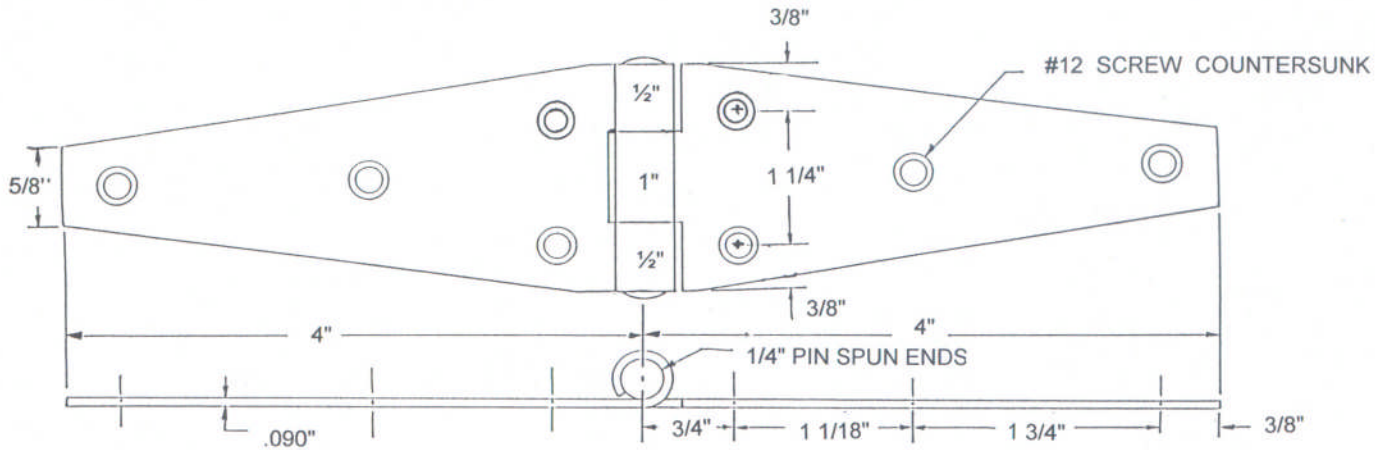

18-8 (T-304) STAINLESS STEEL

JMC JEFCO

JEFCO MANUFACTURING, INC.

SCALE: NA	APPROVED BY:	DRAWN BY SPK
DATE: 10/2001		REVISED

STAINLESS STEEL .090" GA. STRAP 4"

SSS-90400-200 HC Black Powder Coated	DRAWING NUMBER 11595BP